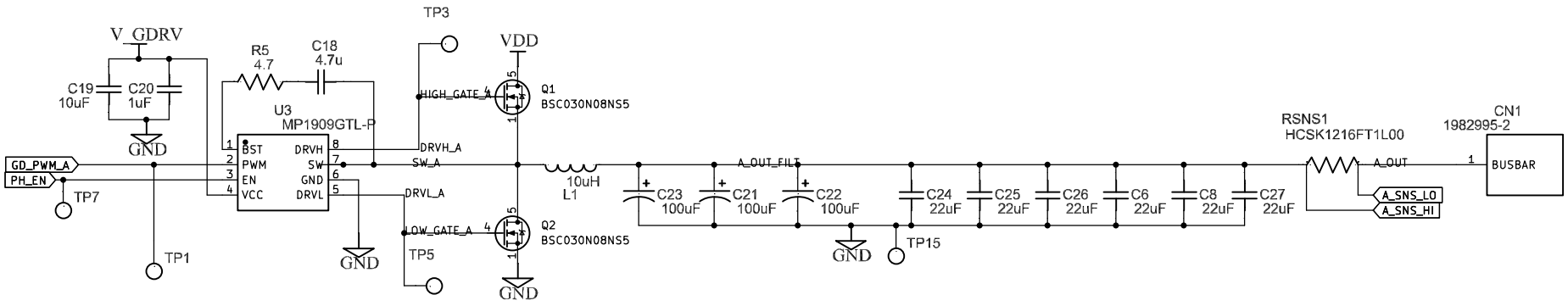

SWITCHING OUTPUT FILTERING OUTPUT CONNECTIONS

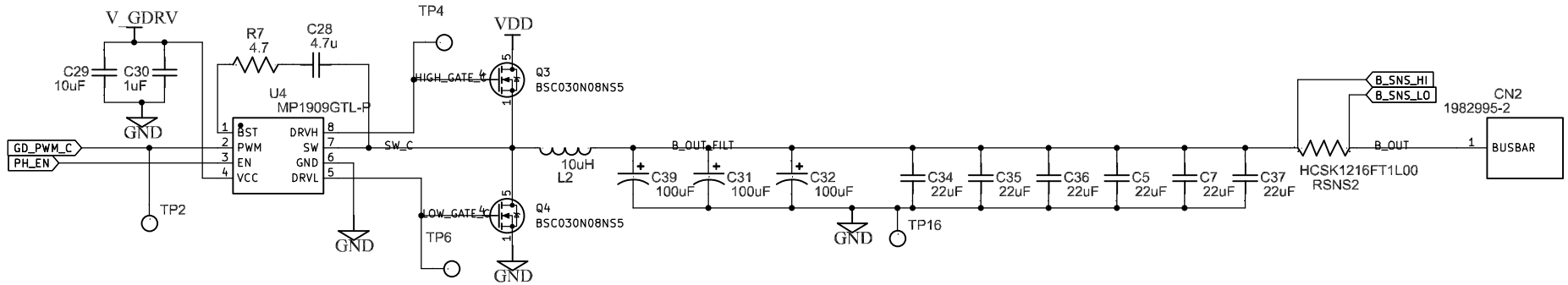

Sheet: /		
File: MPHB-002 Schematic H-Bridges.kicad_sch		
Title: MPHB-002 H-Bridges		
Size: A4	Date: 2026-04-06	**Rev: SCH-002-02**
KiCad E.D.A. 9.0.4		Id: 1/1